3D Printed Speaker Build Guide

Overview

This DIY 3D-printed speaker has incredible audio quality and is a simple, non-technical weekend build. Featuring a dual channel 5W setup with a true stereo effect and hours of battery life, it's a highly capable portable speaker for its price tag. The assembly is straightforward and perfect for a weekend project, requiring just some basic soldering and hardware mounting to put together a premium sounding device.

Required Tools

- 3D Printer (for manufacturing the enclosure)
- Soldering Iron (for electronics wiring)
- Hot Glue Gun (for sealing the enclosure seams)
- Allen Key (for hardware assembly)
-

Bill of Materials

Item / Description	Qty	Unit Cost ($)	Total Cost ($)	Link
Amplifier Board	1	$5.89	$5.89	View on AliExpress
Speakers	1	$12.28	$12.28	View on AliExpress
Power Board	1	$6.73	$6.73	View on AliExpress
Batteries	1	$11.08	$11.08	View on AliExpress
3D Printing Filament (248g)	1	$4.96	$4.96	*N/A (estimated material usage)*
M2/M3 Screw Assortment Kit	1	$1.09	$1.09	View on AliExpress
		Grand Total	**$42.03**	

Building Steps

Phase 1: 3D Printing & Preparation

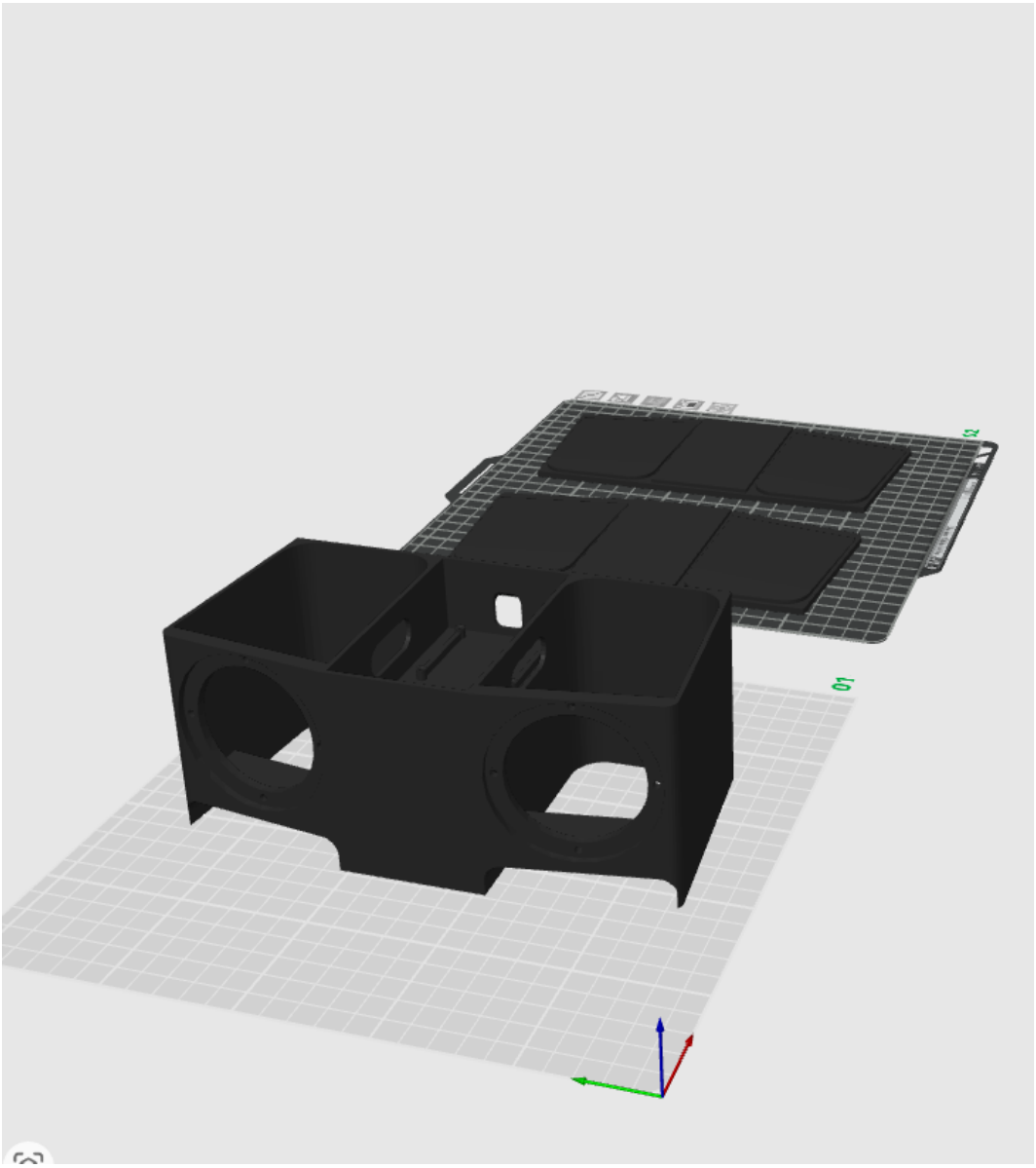

Speaker enclosure parts laid out in slicer

1. Download the CAD Files: Obtain the necessary STL/3MF files for the speaker enclosure (should be attached to the zip folder this project guide is in).

2. Slicer Settings: Load the files into your preferred slicer. Use the following recommended settings:

- Resolution: Standard to Fine
- Infill Density: 15%
- Walls/Perimeters: 2 wall layers
- Supports: Tree supports enabled

3. Print the Components: You will need to print the following quantities:

- 1x Main Body
- 2x Top and Bottom (Print this file twice to yield one top and one bottom piece)

4. Post-Processing: Once the prints are finished, carefully remove all tree supports and clean up the surrounding areas on the printed parts.

Phase 2: Electronics Assembly & Wiring

5. Mount the Amplifier: Place the amplifier board into its designated spot in the main body and screw it into place.

6. Solder Power Wires: Solder two wires to the positive and negative power terminals on the amplifier board. Ensure these wires are cut generously long.

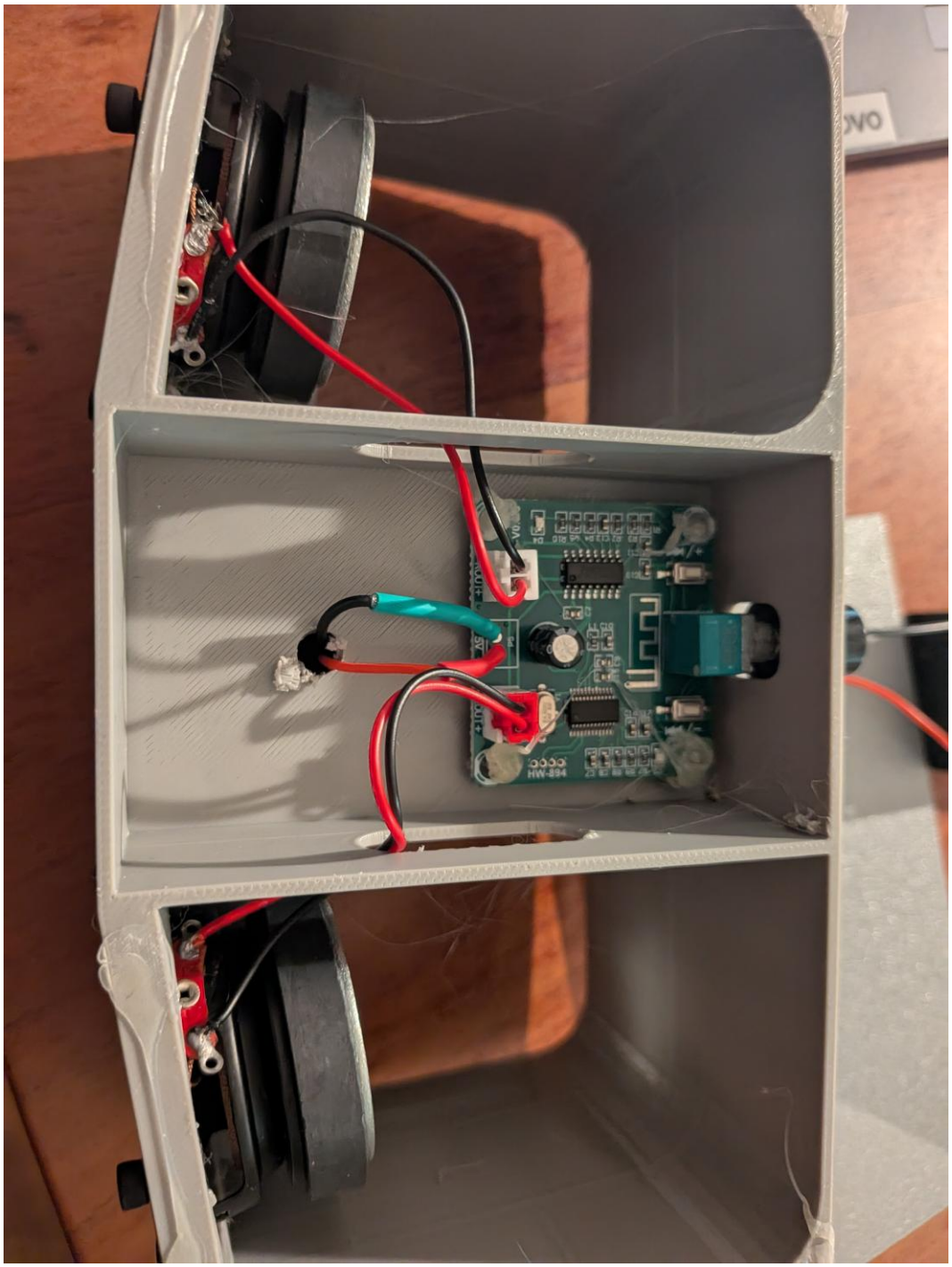

Amplifier board mounted and wired inside the enclosure

7. Route the Power: Pass the newly soldered power wires through the centre hole in the main body so they emerge on the other side.

8. Connect the Battery Board: Solder the routed power wires onto the rechargeable lithium battery board / power supply unit.

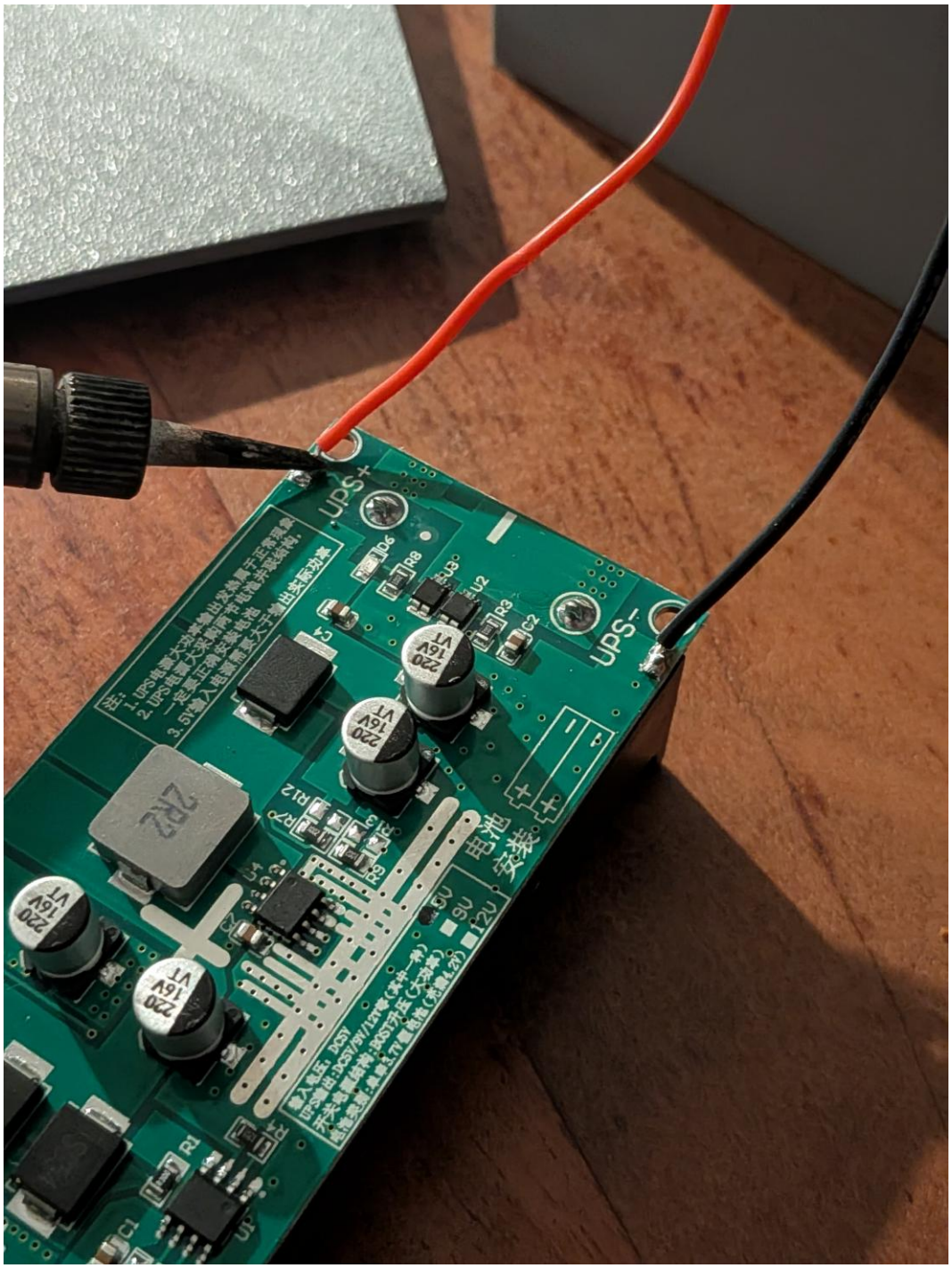

Power board with wires soldered to UPS+ and UPS- terminals

9. Mount the Charging Board: Once the soldering is complete, screw the charging board securely into the main body.

Phase 3: Hardware & Final Assembly

10. Wire the Speakers: Route the speaker wires to the amplifier board and clip them into their respective terminals.

11. Mount the Speakers: Seat the speakers into the main body and secure them using M3 screws.

12. Cap the Enclosure: Fit the printed top and bottom pieces onto the main body.



Soldering the seams shut

13. Seal the Seams: Permanently secure the enclosure by filling in the seams. You can do this by running a bead of hot glue along the joints, or by using a soldering iron to plastic-weld the seams together.

That's All — Enjoy Your New Speaker!

a photo of your finished project to callum@ewenbuilds.xyz or reach out to me on Instagram at @callum_ewen. Have fun building!